TOYO LED ELECTRONICS LIMITED

http://www.toyo-led.com e-mail: sales@toyo-led.com

PACKAGE DIMENSION

E40567

Pb-free

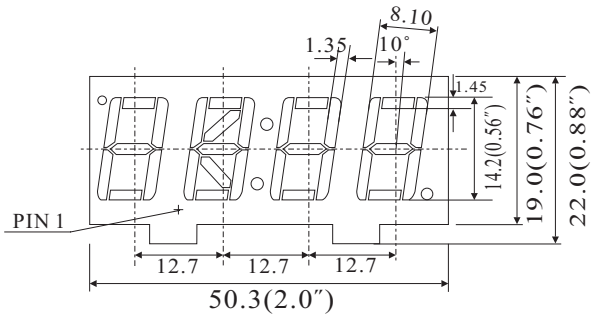

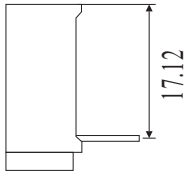

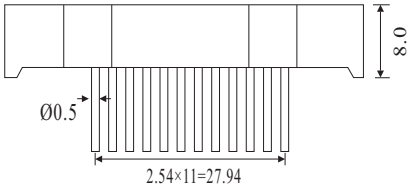

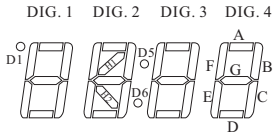

UNIT: MM(INCH) TOLERANCE: ±0.25(0.01")

INTERNAL CIRCUIT DIAGRAM

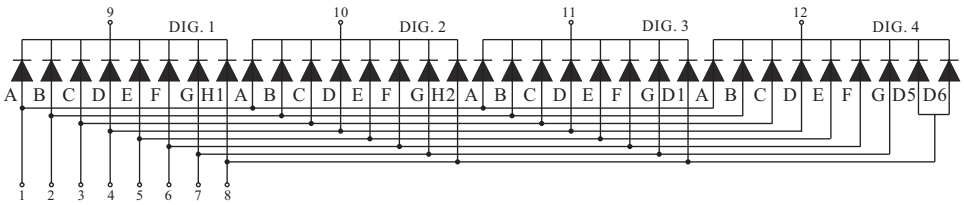

CODE L

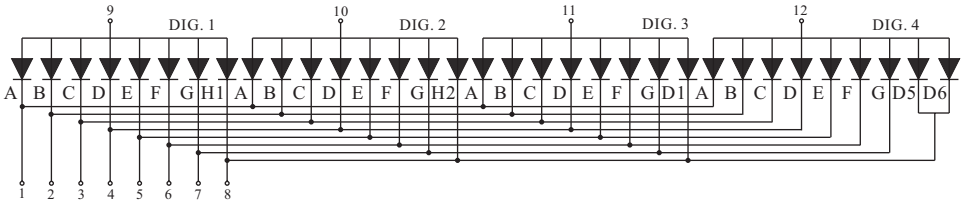

CODE I